RIVET NUTS

knurled body ,countersunk head
material: steel ,stainless steel, aluminium,brass.
Type:HX77 1 open end type ,HX77F 1 closed end type.

Advantages:
Very small head
Open end lets thread go all the way through
Closed end prevents moisture, dust etc

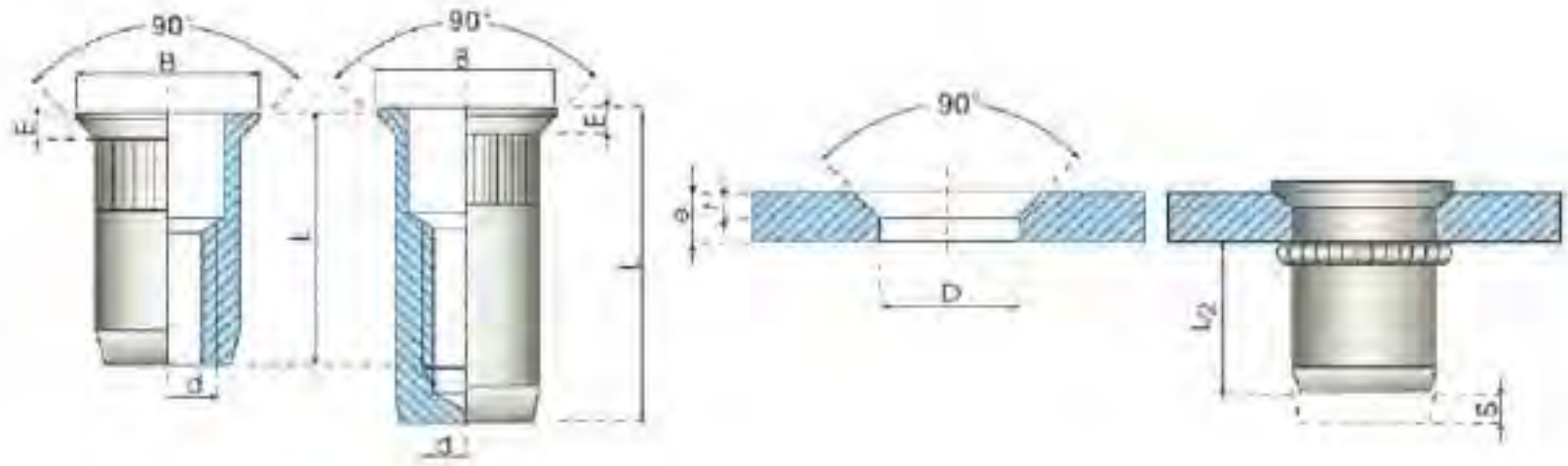

d	grip range e	hole diameter D ± 0.1/0	f	B	E	S*	open end L	open end L2*	open end Code No	closed end L	closed end L2*	closed end Code No
M3	1.00-1.75	5	1.0	7	1.1	S=3.2-e	8.8	6.0	HX77 103 175	13.1	10.3	HX77F 103 175
	1.75-2.50	5	1.2	7	1.3	S=4.0-e	9.6	6.0	HX77 103 250	13.9	10.3	HX77F 103 250
	2.50-3.25	5	1.2	7	1.3	S=4.7-e	10.4	6.0	HX77 103 325	14.7	10.3	HX77F 103 325
M4	1.00-1.75	6	1.0	8	1.1	S=3.2-e	9.2	6.3	HX77 104 175	14.2	11.3	HX77F 104 175
	1.75-2.50	6	1.2	8	1.3	S=4.0-e	10.0	6.3	HX77 104 250	15.0	11.3	HX77F 104 250
	2.50-3.25	6	1.2	8	1.3	S=4.7-e	10.8	6.3	HX77 104 325	15.8	11.3	HX77F 104 325
M5	1.00-2.00	7	1.0	9	1.1	S=4.0-e	11.6	8.5	HX77 105 200	17.7	14.6	HX77F 105 200
	2.00-3.00	7	1.4	9	1.5	S=5.0-e	12.7	8.5	HX77 105 300	18.8	14.6	HX77F 105 300
	3.00-4.00	7	1.4	9	1.5	S=6.0-e	13.8	8.5	HX77 105 400	19.9	14.6	HX77F 105 400
	4.00-5.00	7	1.4	9	1.5	S=7.0-e	14.9	8.5	HX77 105 500	21.0	14.6	HX77F 105 500
M6	1.50-3.00	9	1.2	11	1.3	S=5.0-e	15.0	10.0	HX77 106 300	22.0	17.0	HX77F 106 300
	3.00-4.50	9	1.5	11	1.6	S=6.5-e	16.6	10.0	HX77 106 450	23.6	17.0	HX77F 106 450
	4.50-6.00	9	1.5	11	1.6	S=8.0-e	18.2	10.0	HX77 106 600	25.2	17.0	HX77F 106 600
	6.00-7.50	9	1.5	11	1.6	S=9.5-e	19.8	10.0	HX77 106 750	26.8	17.0	HX77F 106 750
M8	1.50-3.00	11	1.4	13	1.5	S=6.0-e	16.5	11.5	HX77 108 300	24.8	19.8	HX77F 108 300
	3.00-4.50	11	2.0	14	2.1	S=7.5-e	18.1	11.5	HX77 108 450	26.4	19.8	HX77F 108 450
	4.50-6.00	11	2.0	14	2.1	S=9.0-e	19.7	11.5	HX77 108 600	28.0	19.8	HX77F 108 600
	6.00-7.50	11	2.0	14	2.1	S=10.5-e	21.3	11.5	HX77 108 750	29.6	19.8	HX77F 108 750
M10	1.50-3.00	13	1.4	15	1.5	S=6.0-e	20.4	15.0	HX77 110 300	30.3	24.9	HX77F 110 300
	3.00-4.50	13	2.0	16	2.1	S=7.5-e	22.0	15.0	HX77 110 450	31.9	24.9	HX77F 110 450
	4.50-6.00	13	2.0	16	2.1	S=9.0-e	23.6	15.0	HX77 110 600	33.5	24.9	HX77F 110 600